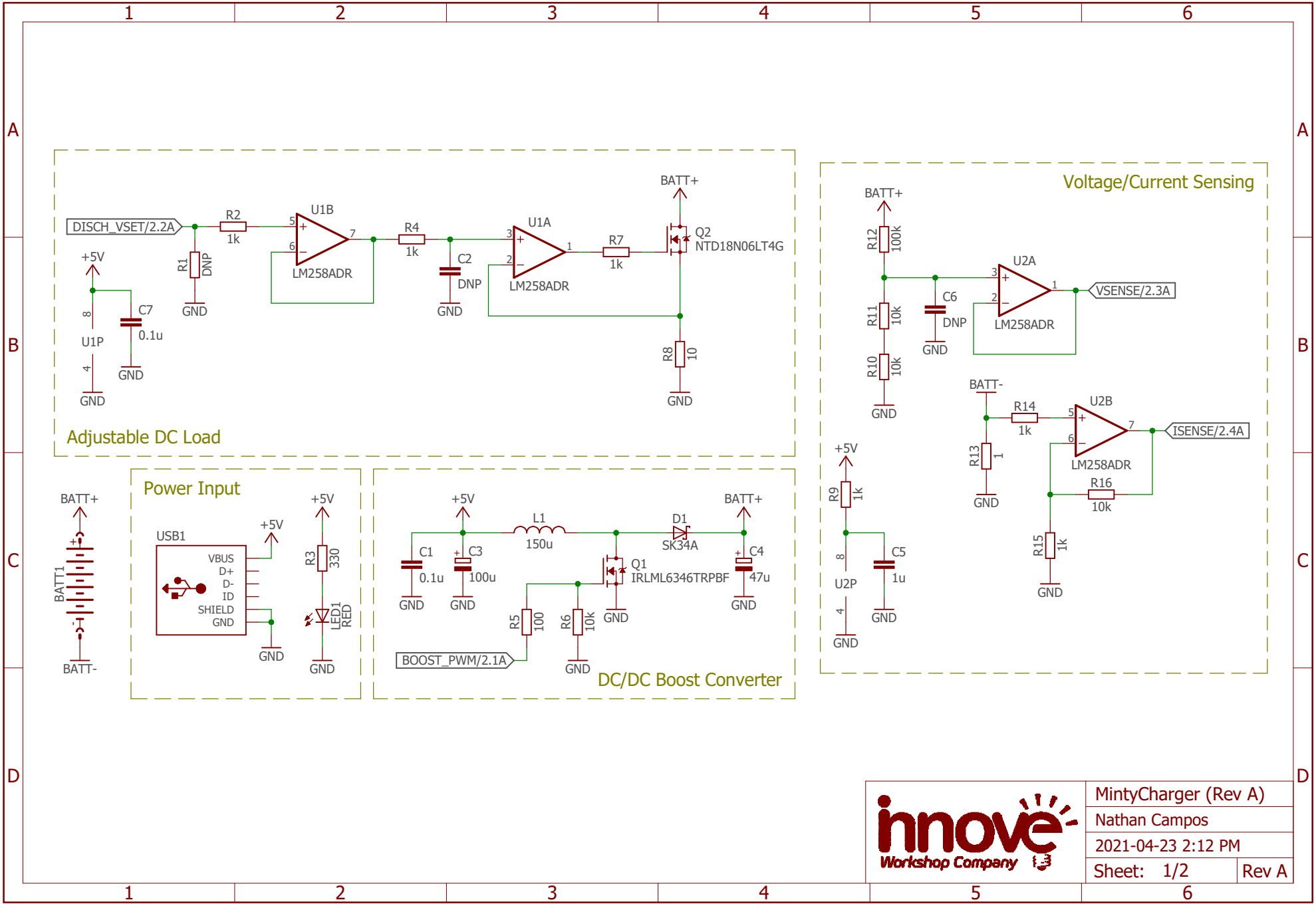
Adjustable DC Load
DISCH_VSET/2.2A
R2
1k
R1
DNP
U1B
LM258ADR
R4
1k
C2
DNP
U1A
LM258ADR
R7
1k
Q2
NTD18N06LT4G
BATT+
R8
10
+5V
C7
0.1u
U1P
GND
Voltage/Current Sensing
R12
100k
R11
10k
R10
10k
C6
DNP
U2A
LM258ADR
VSENSE/2.3A
R14
1k
R13
1
U2B
LM258ADR
ISENSE/2.4A
R16
10k
R15
1k
BATT-
R9
1k
C5
1u
U2P
Power Input
USB1
VBUS
D+
D-
ID
SHIELD
GND
R3
330
LED1
RED
BATT1
DC/DC Boost Converter
L1
150u
D1
SK34A
C1
0.1u
C3
100u
C4
47u
Q1
IRLML6346TRPBF
R5
100
R6
10k
BOOST_PWM/2.1A
MintyCharger (Rev A)
Nathan Campos
2021-04-23 2:12 PM
Sheet: 1/2
Rev A
innove
Workshop Company

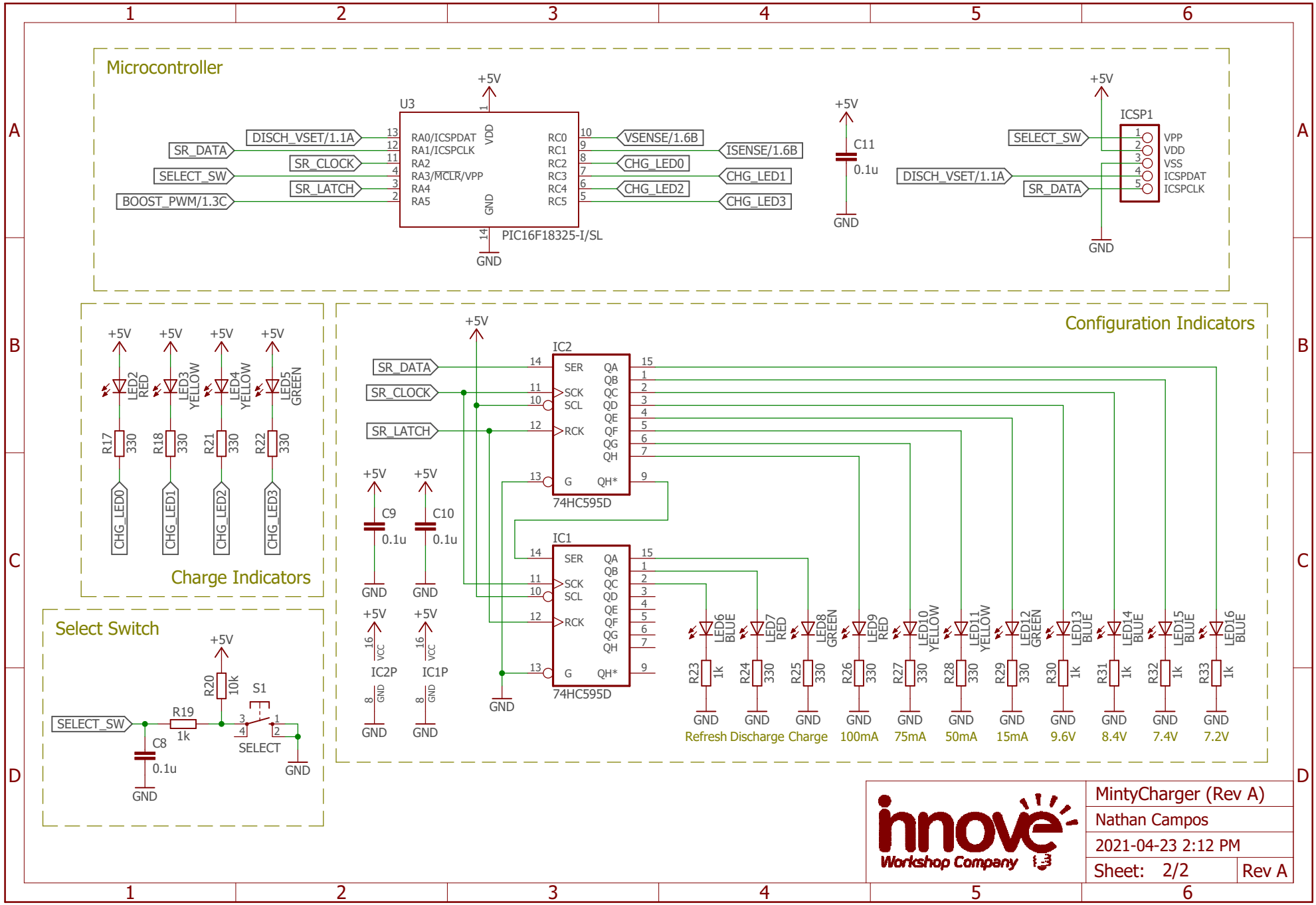
Microcontroller
U3
PIC16F18325-I/SL
RA0/ICSPDAT
RA1/ICSPCLK
RA2
RA3/MCLR/VPP
RA4
RA5
RC0
RC1
RC2
RC3
RC4
RC5
VDD
GND
+5V
DISCH_VSET/1.1A
SR_DATA
SR_CLOCK
SELECT_SW
SR_LATCH
BOOST_PWM/1.3C
VSENSE/1.6B
ISENSE/1.6B
CHG_LED0
CHG_LED1
CHG_LED2
CHG_LED3
C11
0.1u
ICSP1
VPP
VDD
VSS
ICSPDAT
ICSPCLK
Charge Indicators
LED2 RED
LED3 YELLOW
LED4 YELLOW
LED5 GREEN
R17 330
R18 330
R21 330
R22 330
Configuration Indicators
IC2
IC1
74HC595D
SER
SCK
SCL
RCK
G
QA
QB
QC
QD
QE
QF
QG
QH
QH*
C9
C10
0.1u
IC2P
IC1P
VCC
LED6 BLUE
LED7 RED
LED8 GREEN
LED9 RED
LED10 YELLOW
LED11 YELLOW
LED12 GREEN
LED13 BLUE
LED14 BLUE
LED15 BLUE
LED16 BLUE
R23 1k
R24 330
R25 330
R26 330
R27 330
R28 330
R29 330
R30 1k
R31 1k
R32 1k
R33 1k
Refresh
Discharge
Charge
100mA
75mA
50mA
15mA
9.6V
8.4V
7.4V
7.2V
Select Switch
SELECT_SW
R19 1k
R20 10k
S1
SELECT
C8
0.1u
innove
Workshop Company
MintyCharger (Rev A)
Nathan Campos
2021-04-23 2:12 PM
Sheet: 2/2
Rev A